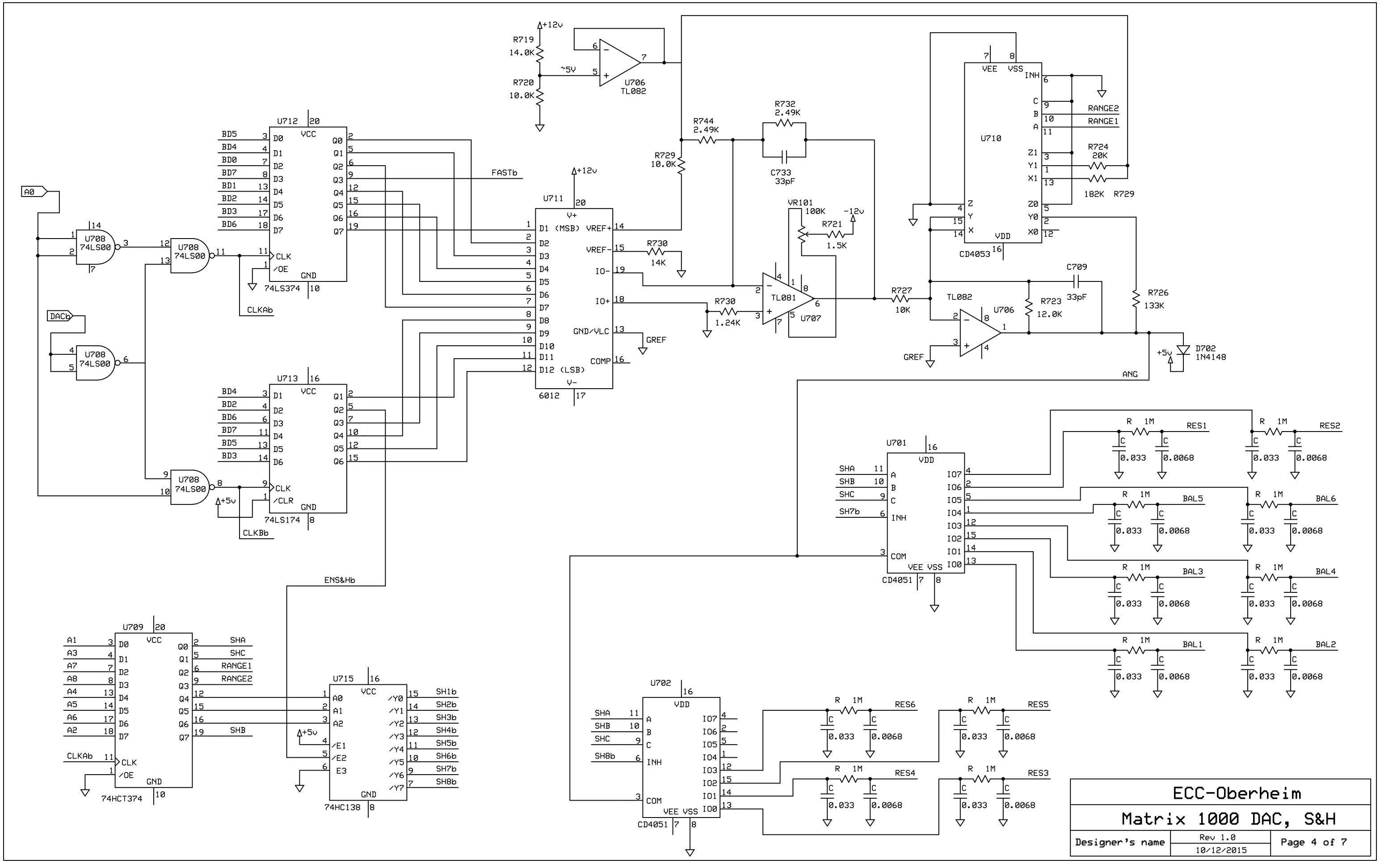
+12v
R719
14.0K
R720
10.0K
~5V
U706
TL082
R744
2.49K
R732
2.49K
C733
33pF
R729
10.0K
U712
74LS374
U711
6012
VR101
100K
R721
1.5K
-12v
R730
14K
R730
1.24K
TL081
U707
R727
10K
U710
CD4053
RANGE2
RANGE1
R724
20K
182K
R729
C709
33pF
R723
12.0K
R726
133K
D702
1N4148
+5v
ANG
GREF
FASTb
CLKAb
DACb
A0
U708
74LS00
U713
74LS174
CLKBb
ENS&Hb
U709
74HCT374
U715
74HC138
U701
CD4051
U702
CD4051
RES1
RES2
BAL5
BAL6
BAL3
BAL4
BAL1
BAL2
RES6
RES5
RES4
RES3
R 1M
C 0.033
C 0.0068
ECC-Oberheim
Matrix 1000 DAC, S&H
Designer's name
Rev 1.0
10/12/2015
Page 4 of 7